Pressure Reduction Valve DM

Working range from 0.5 bar to 10.0 bar

UNIVERSAL

Pressure Reduction Valve DM

Suitability for Industry Specific Applications

Applications

- Pressure reduction valve for manual control of compressed air in systems
- Targeted supply of compressed air through precise pressure control, for pneumatic vacuum generators, etc.
- For use in testing and measuring applications, such as testing for leaks

Design

- Pressure reduction valve with robust aluminum housing
- Precise pressure adjustment with lockable control handle
- Manometer and bracket included with delivery

Product Highlights

- Mechanically adjustable pressure reducer enables very high repeatability
- Maintains precisely the set pressure value
- Easy and flexible to install, as it is independent of inlet pressure and reversible

Designation Code Pressure Reduction Valve DM

DM	–	0.5…10	–	G1/2-IG
1		2		3

1 – Abbreviated designation

Code	Version
DM	DM

2 – Working area

Code	Working area in bar
0.5…10	0.5 to 10

3 – Connection

Code	Connection
G1/2-IG	G1/2-IG (IG = female (F))

Pressure reduction valve DM is delivered as a ready-to-connect product, including mounting bracket.

Ordering Data Pressure Reduction Valve DM

Type	Part no.
DM 0.5...10 G1/2-IG	10.07.11.00025

Technical Data Pressure Reduction Valve DM

Type	Work area [bar]	Flow rate max. [l/min]*	Flow rate max. [m³/h]**	Operating temperature [°C]	Weight [kg]	Durchfluss max. Druck [l/min]
DM 0.5...10 G1/2-IG	0,5 ... 10,0	-	78	-10 ... 60 °C	0.74	1,300

*Input pressure 10 bar and output pressure 6.3 bar
**Input pressure 10 bar and output pressure 6.3 bar

© J. Schmalz GmbH / Reserve technical changes / generated on: 13.12.2023

Contact Schmalz: J. Schmalz GmbH / Johannes-Schmalz-Str. 1 / 72293 Glatten / +49 7443 2403-105 / kundencenter@schmalz.de

Pressure Reduction Valve DM

Working range from 0.5 bar to 10.0 bar

Design Data Pressure Reduction Valve DM

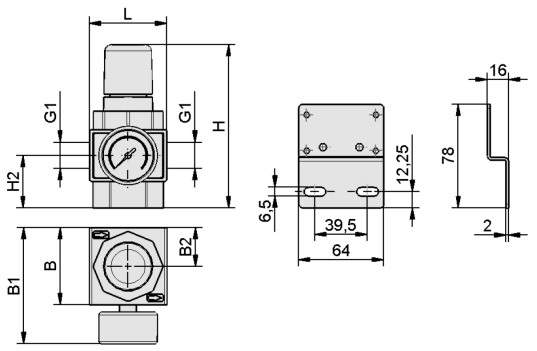

DM

Design Data Pressure Reduction Valve DM

Type	B1 [mm]	B2 [mm]	G1	H [mm]	H2 [mm]
DM 0.5...10 G1/2-IG	96	32	G1/2"-F	136	44

Contact Schmalz: J. Schmalz GmbH / Johannes-Schmalz-Str. 1 / 72293 Glatten / +49 7443 2403-105 / kundencenter@schmalz.de